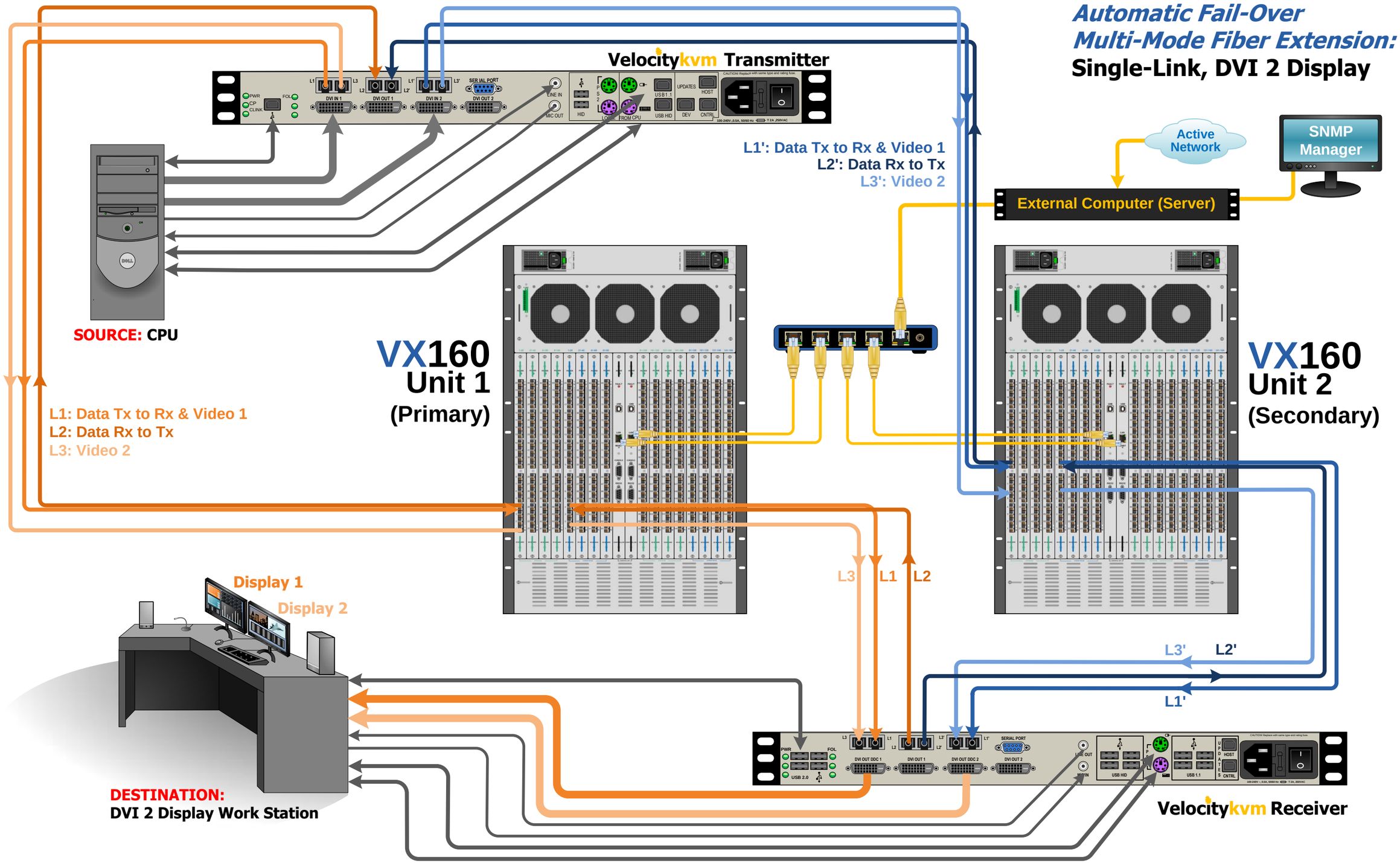Velocitykvm-24 Extenders with VX160 Routers